D1 to D4 Footprint reversed on PCB
Install D1 D2 D3 D4 REVERSED to footprint

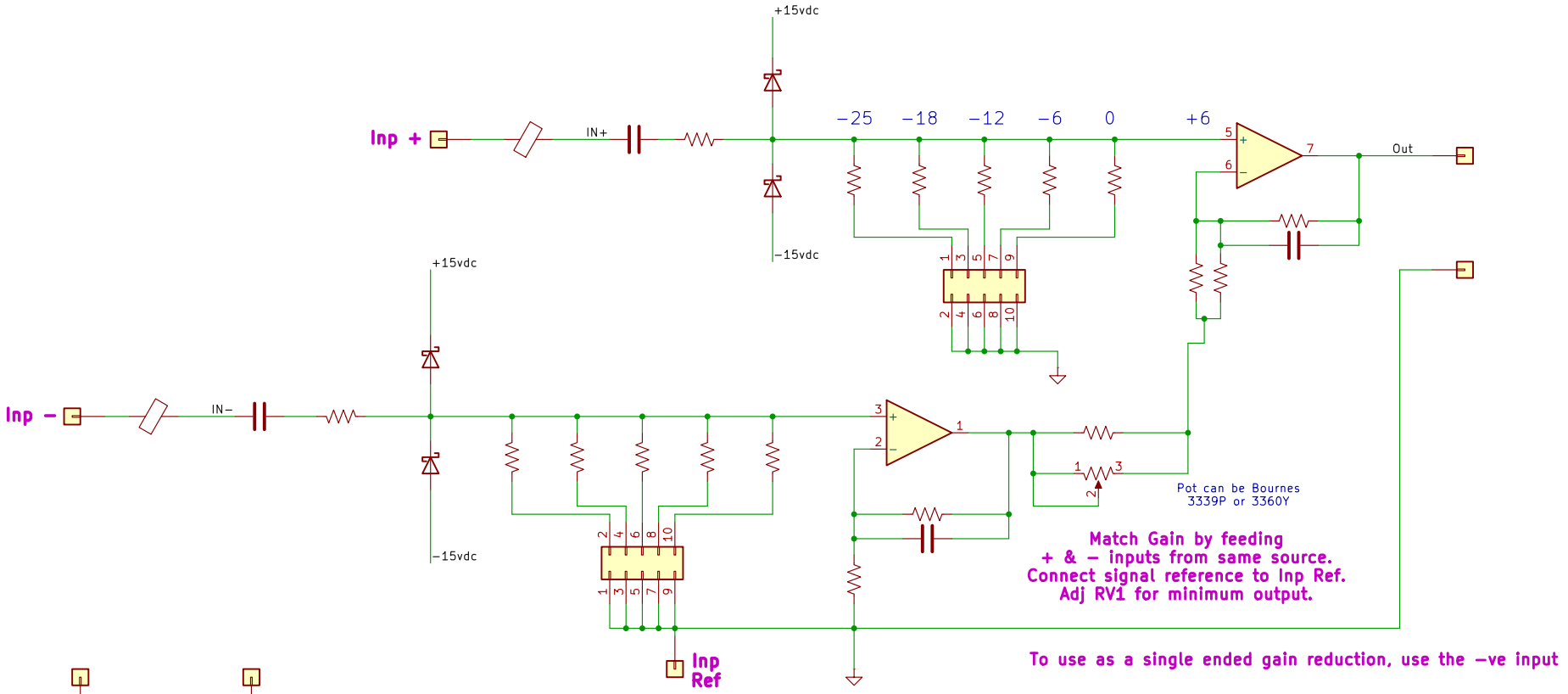

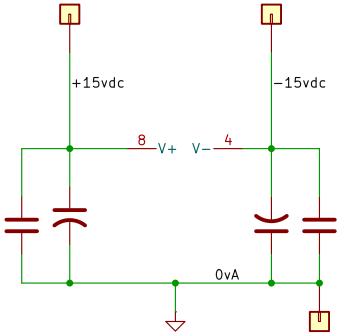

Sheet: / File: InstAmp.kicad_sch		
Title: Adjustable Instrumentation Amplifier		
Size: A4	Date: 260106	**Rev:**
KiCad E.D.A. 10.0.8		Id: 1/1